2R-5 Series
Gas Discharge Tubes



Additional Information

Resources | Accessories | Samples

Agency Approvals

Agency	Agency File Number
	E527857

2 Electrode GDT Graphical Symbol



Description

GDT (Gas Discharge Tubes) is placed in front of, and in parallel with, sensitive telecom equipment such as power lines, communication lines, signal lines and data transmission lines to help protect them from damage caused by transient surge voltages that may result from lightning strikes and equipment switching operations. These devices do not influence the signal in normal operation. However, in the event of an overvoltage surge, such as a lightning strike, the GDT switches to a low impedance state and diverts the energy away from the sensitive equipment. Our GDTs offer a high level of surge protection, a broad voltage range, low capacitance, and many form factors including new surface mount devices, which makes them suitable for applications such as Main Distribution Frame (MDF) modules, high data-rate telecom applications (e.g. ADSL, VDSL), and surge protection on power lines. Their low capacitance also results in less signal distortion. When used in a coordinated circuit protection solution with PolySwitch devices, they can help equipment manufacturers meet stringent safety regulatory standards.

Features

- Stable breakdown voltage
- High insulation resistance
- High current rating
- Low capacitance (≤1.5pF)
- Stable performance over life
- Large absorbing transient current capability
- Fast response time
- RoHS compliant
- Standard Size: 5.5mm*6.0mm
- Meets MSL level 1, per J-STD-020
- Storage and operating temperature: -40℃ ~ +90℃

Application

- Repeaters, Modems
- Subscriber protection
- Telephone Interface, Line cards
- Data communication equipment
- Line test equipment
- Branch exchange
- Subscriber protection
- Alarm system
- Tuner
- Antenna protection

© 2026 Liown Semiconductor Co., Ltd.
Specifications are subject to change without notice.
Version: V3

2R-5 Series
Gas Discharge Tubes

Electrical Characteristics (T_A=25℃ unless otherwise noted)

Part Number		Device Marking Code	DC Spark-over Voltage	Maximum Impulse Spark-over Voltage	Nominal Impulse Discharge Current	Alternating Discharge Current	Impulse Life	Minimum Insulation Resistance		Maximum Capacitance	Agency Approvals
			100V/s (V)	1000V/μs (V)	8/20μs, 10 times (kA)	50Hz, 1sec (A)	10/1000μs, 100A	Test Voltage	GΩ	1MHz (pF)	
2R075LL-5	2R075LM-5	075	75±20%	600	5	5	300 times	25VDC	1	1.5	√
2R090LL-5	2R090LM-5	090	90±20%	600	5	5	300 times	50VDC	1	1.5	√
2R150LL-5	2R150LM-5	150	150±20%	700	5	5	300 times	100VDC	1	1.5	√
2R230LL-5	2R230LM-5	230	230±20%	700	5	5	300 times	100VDC	1	1.5	√
2R250LL-5	2R250LM-5	250	250±20%	800	5	5	300 times	100VDC	1	1.5	√
2R300LL-5	2R300LM-5	300	300±20%	900	5	5	300 times	100VDC	1	1.5	√
2R350LL-5	2R350LM-5	350	350±20%	900	5	5	300 times	100VDC	1	1.5	√
2R400LL-5	2R400LM-5	400	400±20%	1000	5	5	300 times	100VDC	1	1.5	√
2R470LL-5	2R470LM-5	470	470±20%	1100	5	5	300 times	250VDC	1	1.5	√
2R600LL-5	2R600LM-5	600	600±20%	1300	5	5	300 times	250VDC	1	1.5	√
2R800LL-5	2R800LM-5	800	800±20%	1500	5	5	300 times	250VDC	1	1.5	√

Test Methods and Results

Items	Test Method	Standard
DC Spark-over Voltage	measured with voltage ramp dv/dt=100V/s.	To meet the specified value
Maximum Impulse Spark-over Voltage	measured with voltage ramp dv/dt=1000V/μs.	To meet the specified value
Impulse Discharge Current	applied between two electrodes, 5 positive and 5 negative surges, with 3 minutes interval time,	To meet the specified value
Alternating Discharge Current	Rated RMS value of AC current at 50Hz, 1 sec. for 10 times with interval time 3 min.	To meet the specified value
Insulation Resistance	measured between two electrodes.	To meet the specified value
Capacitance	measured between two electrodes. Test frequency: 1MHz	To meet the specified value

Soldering Parameters (Reflow Soldering)

Reflow Condition		Pb-Free Assembly
Pre Heat	-Temperature Min ($T_{s\,min}$)	150℃
	-Temperature Max ($T_{s\,max}$)	200℃
	-Time (min to max) (t_s)	60-180 secs
Average ramp-up rate(Liquidus Temp (T_L) to peak		3℃/second max.
$T_{S\,(max)}$ to T_L-Ramp-up Rate		3℃/second max.
Reflow	-Temperature (T_L) (Liquidus)	217℃
	-Time (min to max) (t_L)	60-150 seconds
Peak Temperature (T_P)		260℃
Time within 5℃ of actual Peak Temperature (t_P)		20-40 seconds
Ramp-down Rate		6℃/second max.
Time 25℃ to Peak Temperature		8 minutes max.
Do not exceed		260℃

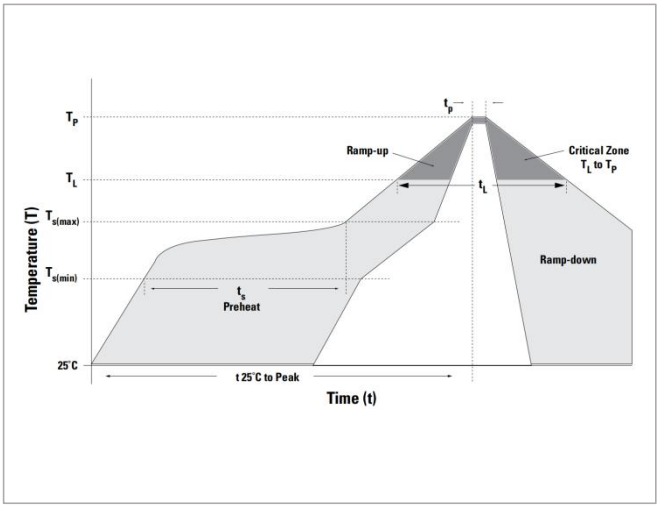

© 2026 Liown Semiconductor Co., Ltd.
Specifications are subject to change without notice.
Version: V3

2R-5 Series
Gas Discharge Tubes

Soldering Parameters (Wave Soldering)

Item	Conditions
Temperature minimum	100℃
Temperature maximum	150℃
Preheat Time	60~180 seconds
Solder Pot Temperature	280℃ Maximum
Solder Dwell Time	2~5 seconds

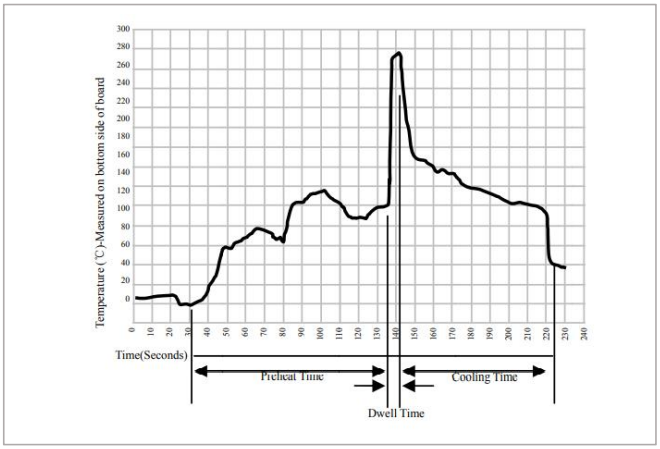

Dimensions

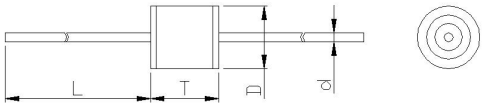

L type

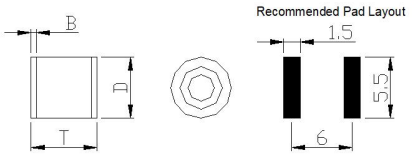

M type

Symbol	Millimeters	Inches
D	5.5±0.3	0.217±0.012
T	6.0±0.3	0.236±0.012
d	0.8±0.1	0.031±0.004
L	30.0 Max.	1.181 Max.
B	0.5±0.1	0.020±0.004

Part Numbering System

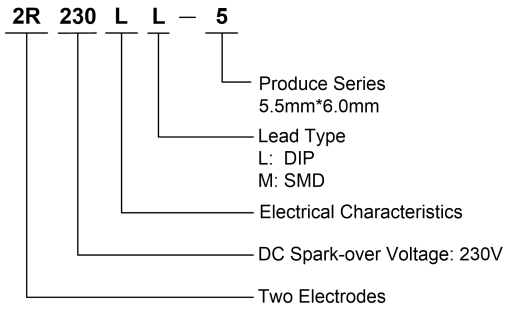

Part Marking System

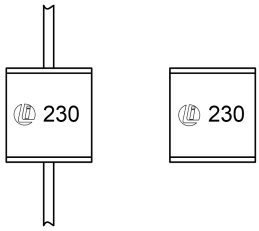

© 2026 Liown Semiconductor Co., Ltd.
Specifications are subject to change without notice.
Version: V3

2R-5 Series
Gas Discharge Tubes

Packaging Specification

Part number	Quantity	Packaging Option
2RxxxLL-5	600	Bulk - 100pcs per tray, 6 trays per inner box
2RxxxLL-5-TR	1000	Tape & Reel - 65mm tape/13" reel
2RxxxLM-5	1000	Tape & Reel - 16mm tape/13" reel

Axial Packing (Tray & Inner box)

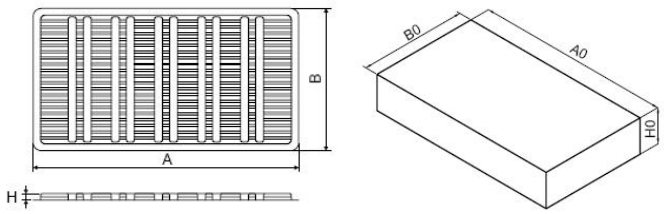

Symbol	Millimeters	Inches
A	265.0±5.0	10.433±0.197
B	146.0±5.0	5.748±0.197
H	8.5±1.0	0.335±0.039
A0	272.0±2.0	10.709±0.079
B0	152.0±2.0	5.984±0.079
H0	50.0±2.0	1.969±0.079

Axial Packing (Tape & Reel)

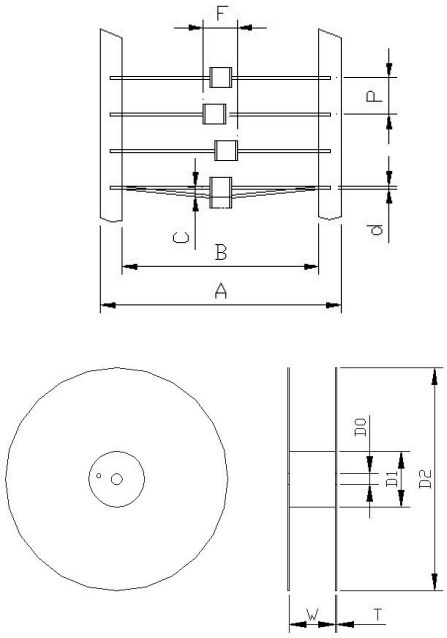

Symbol	Millimeters	Inches
P	10.0±0.5	0.394±0.020
A	65.0±3.0	2.559±0.118
B	52.0±2.0	2.047±0.079
C	1.2 Max.	0.047 Max.
d	0.8±0.1	0.031±0.004
F	7.4 Max.	0.291 Max.
D0	16.0±1.0	0.630±0.039
D1	82.0±2.0	3.228±0.079
D2	330.0±2.0	12.992±0.079
W	70.0±0.5	2.756±0.020
T	3.0±0.2	0.118±0.008

© 2026 Liown Semiconductor Co., Ltd.
Specifications are subject to change without notice.
Version: V3

2R-5 Series
Gas Discharge Tubes

SMD Packing (Tape & Reel)

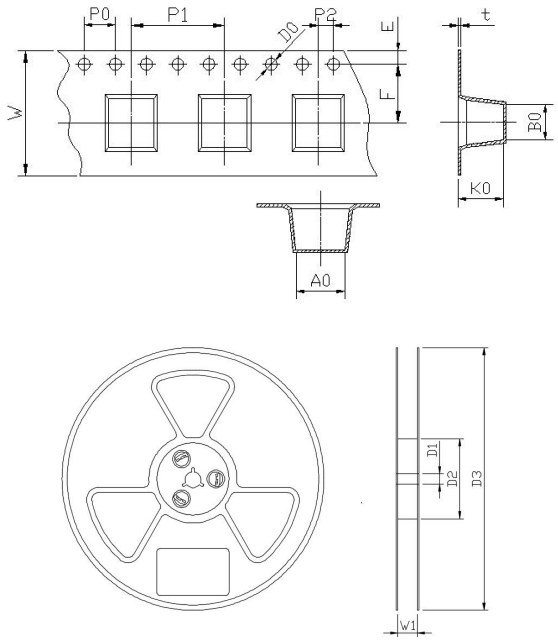

Symbol	Millimeters	Inches
W	16.0±0.2	0.630±0.008
P0	4.0±0.1	0.157±0.004
P1	12.0±0.2	0.472±0.008
P2	2.0±0.1	0.079±0.004
D0	1.55±0.1	0.061±0.004
E	1.75±0.1	0.069±0.004
F	7.5±0.1	0.295±0.004
A0	5.8±0.1	0.228±0.004
K0	5.8±0.1	0.228±0.004
B0	6.3±0.1	0.248±0.004
t	0.5±0.1	0.020±0.004
D1	13.3±1.0	0.524±0.039
D2	100.0±2.0	3.937±0.079
D3	330.0±2.0	12.992±0.079
W1	16.5±0.5	0.650±0.020

Disclaimer Notice - Information furnished is believed to be accurate and reliable. However, users should independently evaluate the suitability of and test each product selected for their own applications. Liown products are not designed for, and may not be used in, all applications. Read complete Disclaimer Notice at http://www.liownsemi.com

© 2026 Liown Semiconductor Co., Ltd.
Specifications are subject to change without notice.
Version: V3